Producer: **Copeland**
Line: **Stream**
Model: **Z9-4MA-22X**
Cooling capacity [kW]: **28.90**
Displacement [m³/h]: **61.7**
Refrigerant: **R22, R134a, R404A, R407A, R407C, R407F, R448A, R449A**
Capacity control: **None, Step (option), Inverter (option)**
Power supply: **400V/3Ph/50Hz**

Data

Compressor technical data

Compressor model		4MA-22X
Displacement	[m³/h]	61.7
Oil charge	[l]	3.30
Oil type		POE RL32-3MAF
Allowed oil types		POE RL32-3MAF, POE MOBIL EAL Arctic 22 CC
Type of lubrication		Oil pump
Capacity control		None, Step (option), Inverter (option)

Compressor electrical data and limits

Compressor power supply		400V/3Ph/50Hz
Maximum continuous current	[A]	36.3
Locked rotor amperage	[A]	175.0
Maximum suction pressure	[bar]	22.5
Maximum discharge pressure	[bar]	31.0

Condenser data

Condenser model		Z9
Fan model		611
Fan quantity		4
Fans power	[W]	1,600
Fan current	[A]	4.10
Air flow	[m³/h]	19,476
Acoustic pressure (10m)	[dB(A)]	59.0

Condensing unit data

Receiver volume	[l]	18.9
Net weight	[kg]	383
Gross weight	[kg]	548
Housing		None
Approved refrigerants		R22, R134a, R404A, R407A, R407C, R407F, R448A, R449A

Dimensions

Length	[mm]	1,107
Height	[mm]	1,263
Width	[mm]	1,600

Due to frequent changes and updates, presented data is informative. Any modification or redistribution of this document is expressly prohibited without the written consent of Elektronika SA. For more information read **Terms of Use**

Connections

Suction valve diameter	[inch]	1 5/8
Liquid line diameter	[inch]	7/8

Due to frequent changes and updates, presented data is informative. Any modification or redistribution of this document is expressly prohibited without the written consent of Elektronika SA. For more information read **Terms of Use**

Performance

Nominal conditions: refrigerant: R449A , evaporation (dew point): -10 °C, ambient temperature: 40 °C, superheating: 10 K

Cooling capacity [kW]

Evaporation temperature [°C]

Ambient temperature [°C]	-40	-35	-30	-25	-20	-15	-10	-5	0	5	7	10	12.5
20	8.55	11.77	15.62	20.16	25.47	31.65	38.76	46.85	56.01	66.20	70.56	77.42	83.41
27	7.11	10.13	13.70	17.93	22.88	28.63	35.25	42.82	51.38	60.99	65.14	71.67	77.41
32	6.09	8.95	12.34	16.34	21.03	26.49	32.78	39.98	48.16	57.36	61.34	67.65	73.21
35	5.47	8.25	11.53	15.40	19.94	25.22	31.32	38.30	46.25	55.21	59.10	65.27	
38		7.55	10.72	14.46	18.85	23.96	29.86	36.64	44.35	53.09	56.88		
40		7.08	10.18	13.84	18.13	23.12	28.90	35.53	43.10	51.68	55.41		
41		6.85	9.92	13.53	17.77	22.71	28.42	34.99	42.48	50.98	54.68		
43		6.39	9.38	12.91	17.05	21.88	27.47	33.89	41.24	49.59			
46			8.59	11.99	15.99	20.64	26.04	32.26	39.39				
49			7.80	11.08	14.93	19.42	24.63	30.65	37.55				

Power consumption [kW]

Evaporation temperature [°C]

Ambient temperatura [°C]	-40	-35	-30	-25	-20	-15	-10	-5	0	5	7	10	12.5
20	6.77	7.65	8.53	9.39	10.24	11.06	11.88	12.68	13.49	14.33	14.67	15.20	15.65
27	6.75	7.77	8.81	9.84	10.86	11.88	12.90	13.91	14.94	16.00	16.44	17.12	17.70
32	6.67	7.80	8.94	10.10	11.26	12.42	13.58	14.76	15.95	17.18	17.69	18.48	19.16
35	6.58	7.78	9.00	10.24	11.48	12.73	13.98	15.25	16.54	17.88	18.43	19.28	
38		7.74	9.04	10.35	11.68	13.01	14.36	15.73	17.13	18.57	19.16		
40		7.71	9.05	10.42	11.80	13.20	14.61	16.04	17.51	19.02	19.65		
41		7.68	9.05	10.45	11.86	13.29	14.73	16.20	17.70	19.25	19.89		
43		7.63	9.05	10.50	11.97	13.46	14.97	16.50	18.07	19.69			
46			9.03	10.56	12.12	13.70	15.31	16.94	18.62				
49			8.98	10.60	12.25	13.93	15.63	17.37	19.15				

Due to frequent changes and updates, presented data is informative. Any modification or redistribution of this document is expressly prohibited without the written consent of Elektronika SA. For more information read **Terms of Use**

Application range

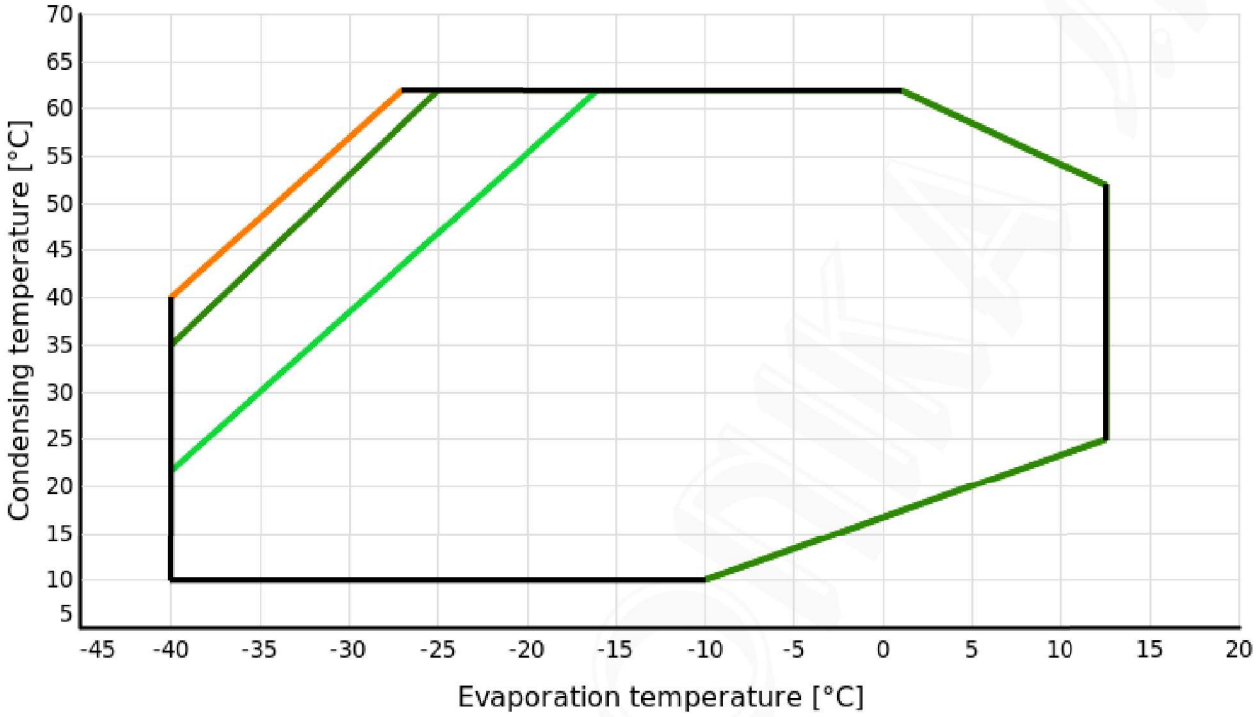

Legend

- Suction gas superheating: 20 K
- Suction gas temperature: 20°C
- Suction gas temperature: 0°C

Due to frequent changes and updates, presented data is informative. Any modification or redistribution of this document is expressly prohibited without the written consent of Elektronika SA. For more information read **Terms of Use**

Dimensions

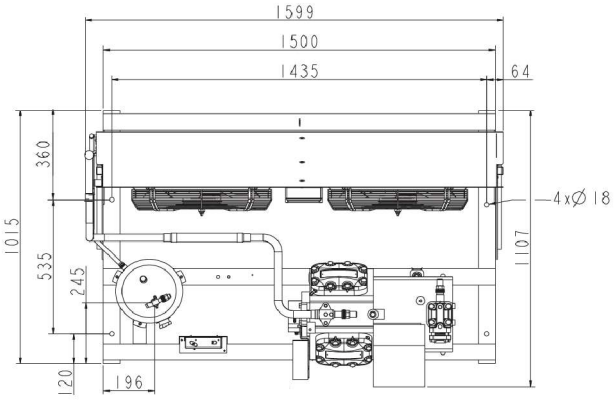

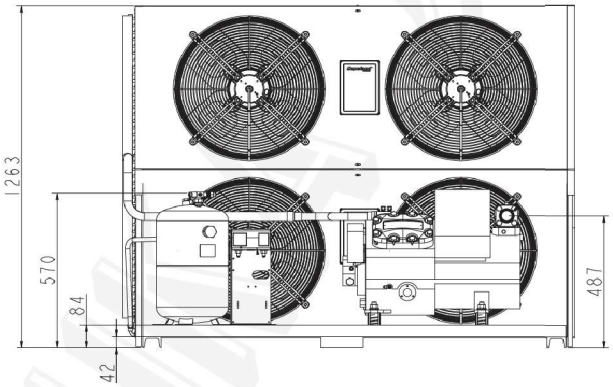

Due to frequent changes and updates, presented data is informative. Any modification or redistribution of this document is expressly prohibited without the written consent of Elektronika SA. For more information read **Terms of Use**